DocuSign Envelope ID: 3ABFDAF7-9184-4E70-9E6E-787C7352EA9E

PROJECT I.D. NO.	SHEET NO.
	Sig.M9

Fabrication Details – CCTV Camera Poles

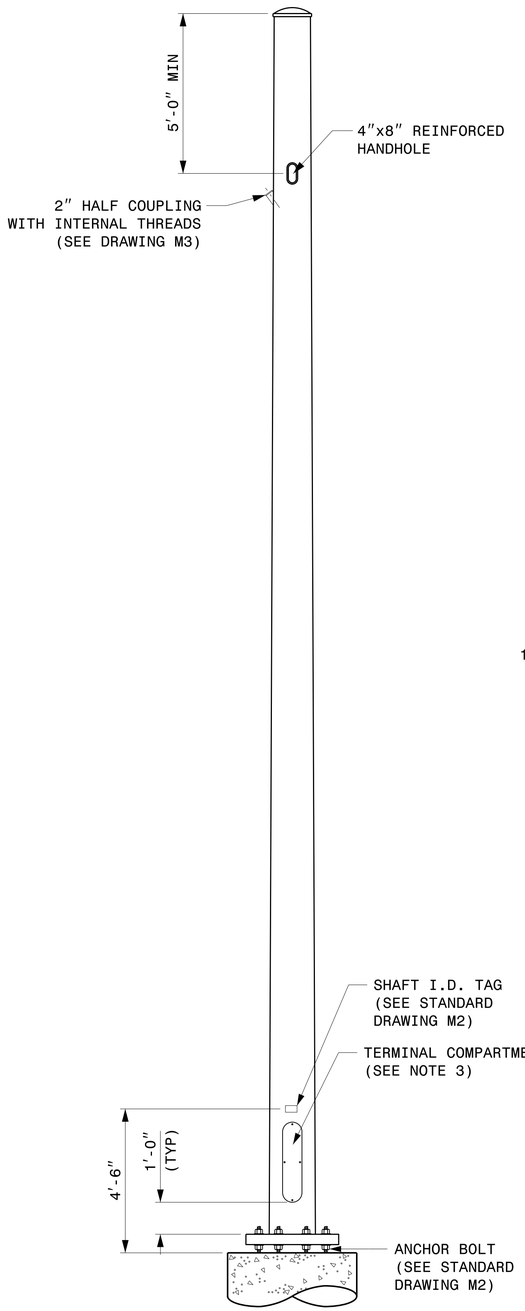

CCTV CAMERA POLE

(NOT TO SCALE)

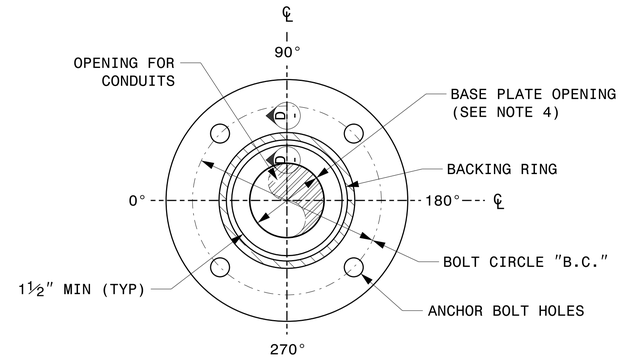

4 BOLT PATTERN
FOR POLES UP TO 40'

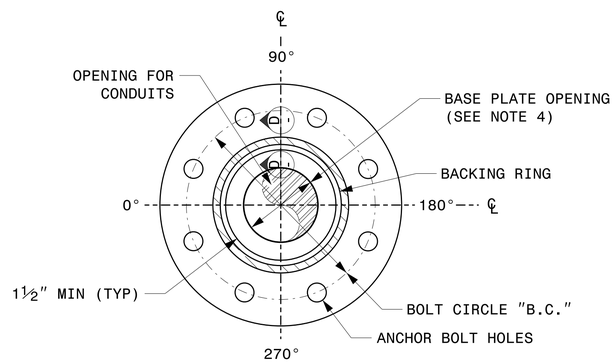

8 BOLT PATTERN
FOR POLES TALLER THAN 40'

BASE PLATE DETAILS

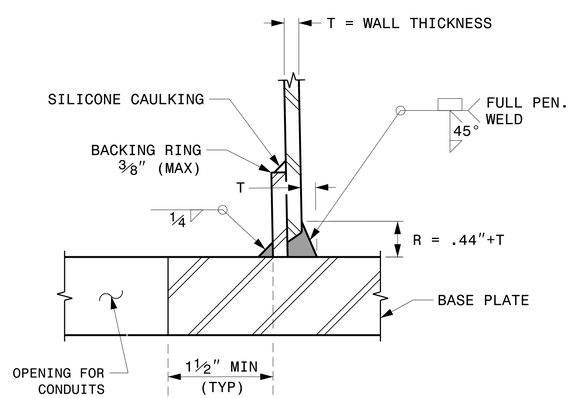

SECTION D-D

(POLE ATTACHMENT TO BASE PLATE)

FULL-PENETRATION GROOVE WELD DETAIL

NOTES:

1. THIS DRAWING PROVIDES BASIC DETAILS FOR CCTV POLES. PROJECT REQUIREMENTS MAY REQUIRE SPECIAL FACTORY PREPS THAT ARE NOT SHOWN ON THESE DETAILS.
2. DETAILS FOR INTERNAL CAMERA LOWERING SYSTEMS ARE NOT SHOWN.
3. POLE MOUNTED CABINETS MAY REQUIRE MODIFICATIONS TO THE LOWER HANDHOLE OPENING TO MOUNT CABINETS. 4" X 8" REINFORCED HANDHOLES ARE ACCEPTABLE OPTIONS, AND MAY BE PREFERRED.
4. OPENING IN POLE BASE SHALL BE EQUAL TO POLE BASE INSIDE DIAMETER MINUS 3½" BUT SHALL NOT BE LESS THAN 8½".
5. USE COMPACT SECTION CRITERIA D/T RATIO PER AASHTO LTS-LRFD 1ST EDITION SECTION 5.7.2.

Prepared in the Offices of:
Transportation Mobility and Safety Division
Signal Design Section
750 N.Greenfield Pkwy,Garner,NC 27529

SCALE 0 NA
NONE

Typical Fabrication Details For CCTV Poles

PLAN DATE:	SEPTEMBER 2023	DESIGNED BY:	K.C. DURIGON
PREPARED BY:	K.C. DURIGON	REVIEWED BY:	C.F. ANDREWS

REVISIONS	INIT.	DATE

SEAL
NORTH CAROLINA PROFESSIONAL SEAL 036626 ENGINEER KEVIN C. DURIGON

DocuSigned by:
Kevin Durigon
SIGNATURE
4B23DC79B3784DA...
09/21/2023
DATE

03-OCT-2023 12:51
S:*ITS\SGU\ITS\Signals\Design Sections\Structures\Drawings*2024 Metal Pole Std Drawings for LRFD*2024 Sig.M9 Fabrication Details - CCTV Poles.dgn
kcdurigon