DocuSign Envelope ID: 3ABFDAF7-9184-4E70-9E6E-787C7352EA9E

PROJECT I.D. NO.	SHEET NO.
	Sig.M7

Construction Details – Foundations

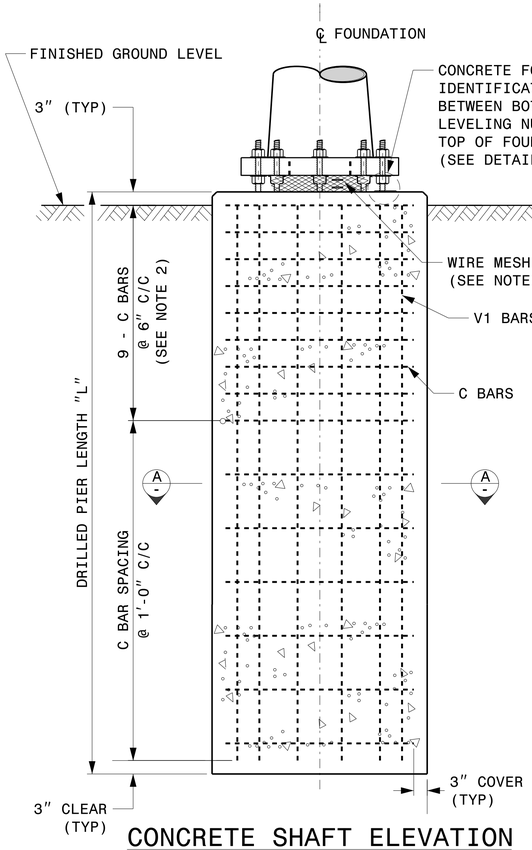

CONCRETE SHAFT ELEVATION

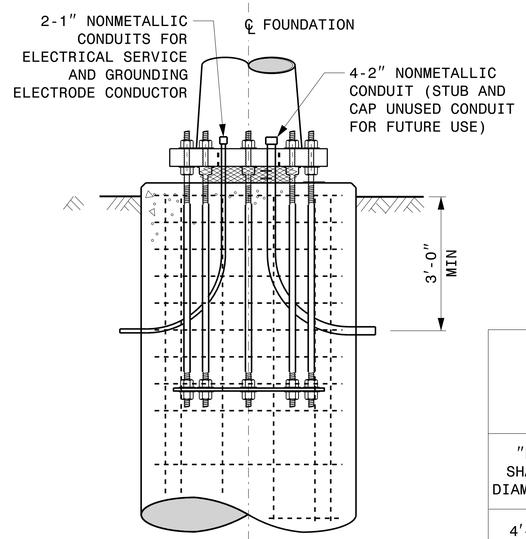

TYPICAL FOUNDATION CONDUIT DETAILS

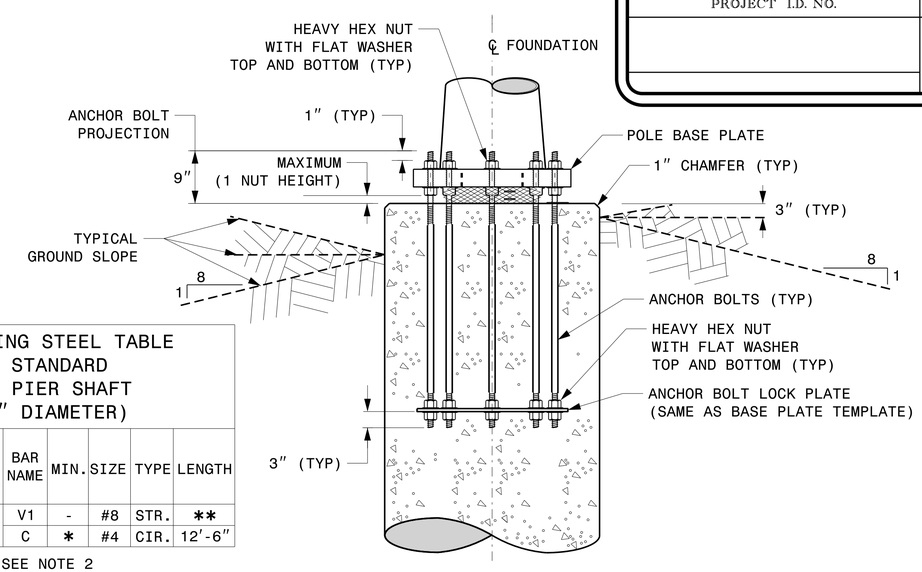

TYPICAL FOUNDATION ANCHOR BOLT DETAILS

(REINFORCING CAGE NOT SHOWN FOR CLARITY)

REINFORCING STEEL TABLE FOR STANDARD DRILL PIER SHAFT (4′-0″ DIAMETER)

"D" SHAFT DIAMETER	CONCRETE VOLUME (CU. YDS)	BAR NAME	MIN.	SIZE	TYPE	LENGTH
4′-0″	.465 X L	V1	-	#8	STR.	**
		C	*	#4	CIR.	12′-6″

* SEE NOTE 2
** SEE NOTE 3

GENERAL NOTES:

1. IF ACTUAL SUBSURFACE CONDITIONS DIFFER SIGNIFICANTLY FROM BORING DATA, CONTACT THE ENGINEER BEFORE EXCAVATING OR PLACING CONCRETE.
2. CIRCULAR TIE REINFORCING RINGS MAY BE VERTICALLY ADJUSTED BY +/-3″ AT A DEPTH BETWEEN 2′-0″ AND 3′-0″ TO FACILITATE THE INSTALLATION OF ELECTRICAL CONDUIT ENTERING IN THE CAGE.
3. FOR STANDARD FOUNDATIONS, SEE SHEET SIG. M8 FOR DETAILS. VERTICAL REINFORCING BARS (V1) MAY BE HORIZONTALLY ADJUSTED BY +/-3″ TO FACILITATE THE INSTALLATION OF ELECTRICAL CONDUIT ENTERING INTO THE CAGE.
4. PROVIDE 2″ TO 5″ FOUNDATION PROJECTION ABOVE GROUND LEVEL, DEPENDING ON THE GROUND SLOPE.
5. UNLESS OTHERWISE SHOWN, FOUNDATION DESIGNS ARE BASED ON NON-SLOPING LEVEL GROUND SURFACES WITH SLOPE RATIOS OF 8:1 (H:V) OR FLATTER. IF ACTUAL GROUND LINE SLOPES ARE STEEPER, CONTACT THE ENGINEER BEFORE EXCAVATING OR PLACING CONCRETE.
6. CONSTRUCT FOUNDATIONS IN ACCORDANCE WITH NCDOT STANDARD PROVISIONS SP09 R005- FOUNDATIONS AND ANCHOR ROD ASSEMBLIES FOR METAL POLES. ALL APPLICABLE 2024 NCDOT STANDARD SPECIFICATIONS ARE REFERENCED IN THIS PROVISION. REFER TO THE NCDOT RESOURCES/SPECIFICATIONS PAGE LOCATED ON THE CONNECT NCDOT WEBSITE.

   https://connect.ncdot.gov/resources/Specifications and Special Provisions.aspx
7. USE AIR ENTRAINED AA CONCRETE MIX WITH A COMPRESSION STRENGTH OF f′c=4500 psi (MIN) AFTER 28 DAYS.
8. USE ASTM A615 GRADE 60 DEFORMED BARS FOR ALL REINFORCING STEEL. MAINTAIN AT LEAST 3″ COVER ON ALL REINFORCEMENT.
9. LOCATE IDENTIFICATION TAG ON TOP OF THE FOUNDATION, DIRECTLY ABOVE THE CONDUIT'S ENTRY POINT.
10. PROVIDE TWO LAYERS OF 4 MESH GALVANIZED WELDED 23 GAUGE (0.025) 6″ WIDE AROUND PIPES UNDER THE BASE PLATE AND SECURE IT WITH TIES IF NECESSARY.
11. PREFERRED LOCATION FOR THE I.D. TAG IS AS SHOWN IN DETAIL-A: DIRECTLY ABOVE THE CONDUIT ENTERING THE FOUNDATION.

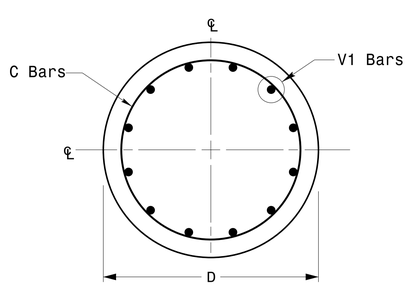

SECTION A-A

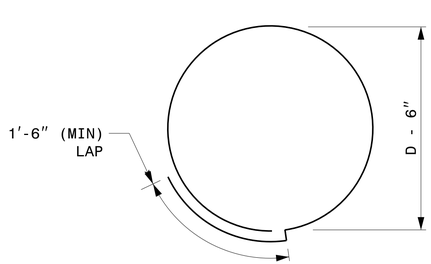

TYPICAL "C" BAR DETAIL

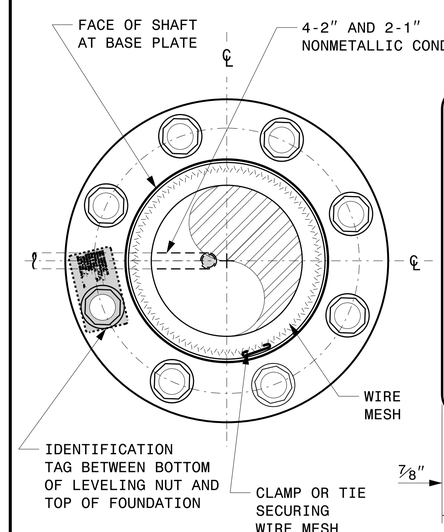

D = DIAMETER
L = LENGTH / DEPTH
mm = MONTH
yy = YEAR

DETAIL-A

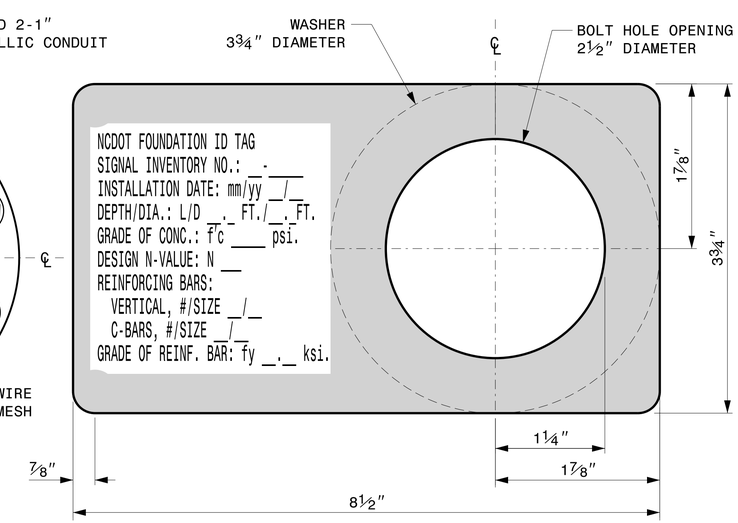

CONCRETE FOUNDATION IDENTIFICATION TAG DETAILS

Prepared in the Offices of:
Transportation Mobility and Safety Division
Signal Design Section
750 N.Greenfield Pkwy,Garner,NC 27529

SCALE
0 NA
NONE

Construction Details For Foundations

PLAN DATE: SEPTEMBER 2023	DESIGNED BY: K.C. DURIGON
PREPARED BY: K.C. DURIGON	REVIEWED BY: D.C. SARKAR

REVISIONS	INIT.	DATE

SEAL
NORTH CAROLINA PROFESSIONAL SEAL 036626 ENGINEER KEVIN C. DURIGON

DocuSigned by:
Kevin Durigon
SIGNATURE
4B23DC79B3784DA...
09/21/2023
DATE

03-OCT-2023 12:45
S:*TSSGU*TS Signals*Signal Design Section*Structures*Drawings*2024 Metal Pole Std Drawings for LRFD*2024 Sig.M7 Std. Construction Details-Strain Poles.dgn
kcdurigon