DocuSign Envelope ID: 3ABFDAF7-9184-4E70-9E6E-787C7352EA9E

PROJECT I.D. NO.	SHEET NO.
	Sig.M6

Fabrication Details – Strain Pole Attachments

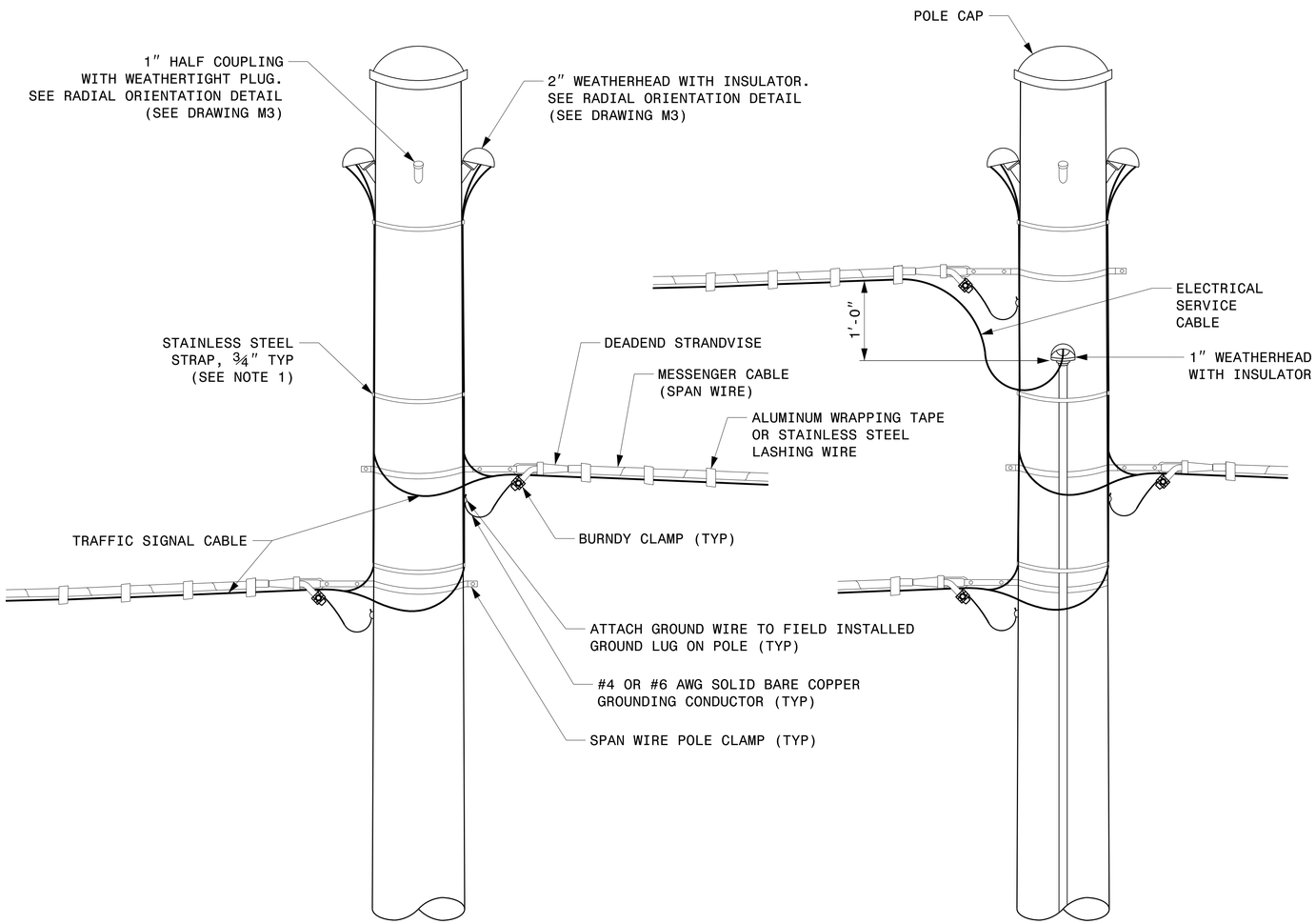

STRAIN POLE ATTACHMENTS

NOTES:

1. STRAP ALL SIGNAL CABLES TO THE SIDE OF THE POLE WITH ¾″ STAINLESS STEEL STRAPS WHEN THE DISTANCE BETWEEN SPAN WIRE ATTACHMENT CLAMP AND WEATHERHEADS EXCEEDS 3′-0″.
2. PROVIDE MINIMUM TWO SPAN WIRE POLE CLAMPS PER POLE.
3. IT IS PROHIBITED TO ATTACH TWO SPAN WIRES AT ONE POLE CLAMP.
4. FOR GENERAL REQUIREMENTS, REFER TO NCDOT STANDARD SPECIFICATIONS FOR ROADWAY AND STRUCTURES, JANUARY 2024.

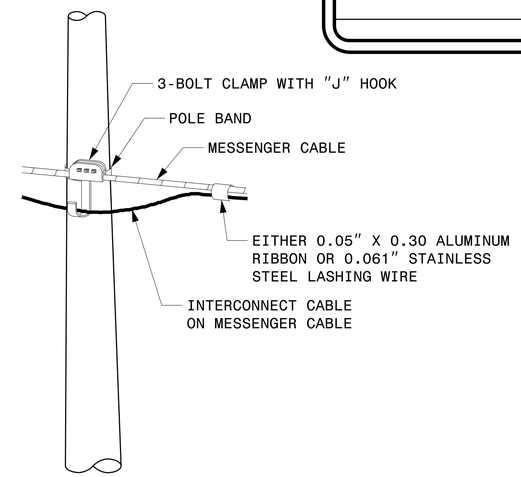

ATTACHMENT OF CABLE TO INTERMEDIATE METAL POLE

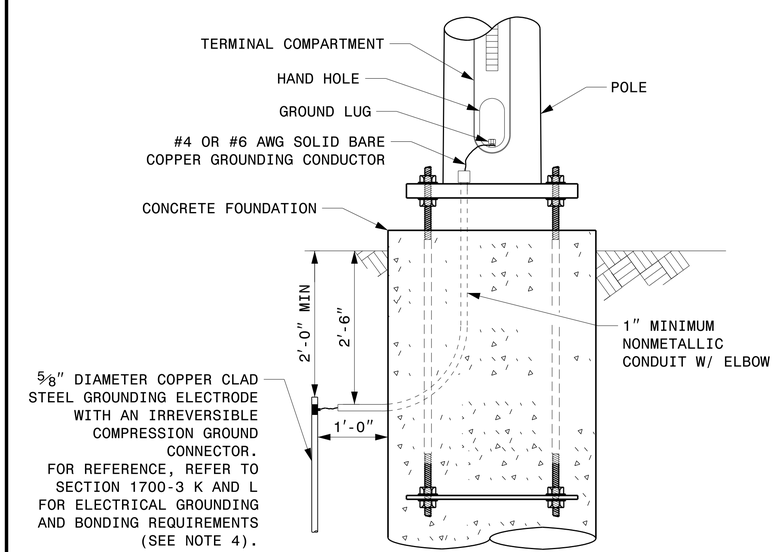

METAL POLE GROUNDING DETAIL FOR STRAIN POLE AND MAST ARM

Prepared in the Offices of:
Transportation Mobility and Safety Division
Signal Design Section
750 N.Greenfield Pkwy,Garner,NC 27529

SCALE
0 NA
NONE

Typical Fabrication Details
For
Strain Pole Attachments

PLAN DATE:	SEPTEMBER 2023	DESIGNED BY:	C.F. ANDREWS
PREPARED BY:	K.C. DURIGON	REVIEWED BY:	D.C. SARKAR

REVISIONS	INIT.	DATE

SEAL
NORTH CAROLINA PROFESSIONAL SEAL 036626 ENGINEER KEVIN C. DURIGON

DocuSigned by:
Kevin Durigon
4B23DC79B3784DA...
SIGNATURE
09/21/2023
DATE

03-OCT-2023 12:41
S:\TIMS\LIMITS\Signals\Signal Design Section\Structures\Drawings\2024 Metal Pole Std Drawings for LRFD\2024 Sig.M6 Std. Fabrication Details-Strain Poles.dgn
kcdurigon