DocuSign Envelope ID: 3ABFDAF7-9184-4E70-9E6E-787C7352EA9E

WELDED RING STIFFENED MAST ARM CONNECTION

PROJECT I.D. NO.	SHEET NO.
	Sig.M5

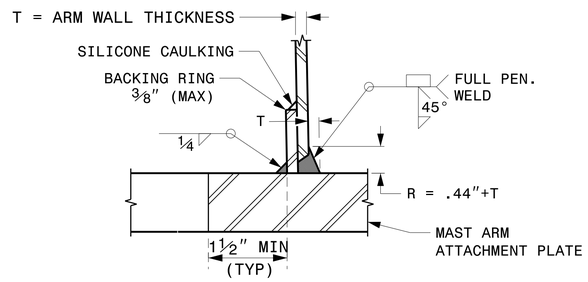

SECTION B-B
FULL-PENETRATION GROOVE WELD DETAIL

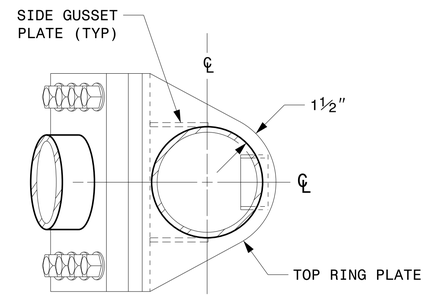

PLAN VIEW

NOTES:

1. PROVIDE A PERMANENT MEANS OF IDENTIFICATION ABOVE THE MAST ARM TO INDICATE PROPER ATTACHMENT ORIENTATION OF THE MAST ARM.
2. DESIGNER WILL DETERMINE THE SIZE OF ALL STRUCTURAL COMPONENTS, PLATES, FASTENERS, AND WELDS SHOWN UNLESS THEY ARE ALREADY SPECIFIED.
3. FABRICATOR IS RESPONSIBLE FOR PROVIDING APPROPRIATE HOLES AT DRAINAGE POINTS TO DRAIN GALVANIZING MATERIALS.
4. FOR MINIMUM EDGE DISTANCE AND NOMINAL BOLT HOLE SIZE, FOLLOW THE LATEST AISC STEEL CONSTRUCTION MANUAL.
5. PROVIDE UPPER HANDHOLE AS NECESSARY WHEN SHAFT EXTENSIONS ARE REQUIRED FOR LUMINAIRE ARMS OR CAMERA. FOR POLES WITHOUT LUMINAIRES/CAMERA, WIRING CAN BE DONE THROUGH THE TOP OF POLE.
6. ALLOWABLE RANGE OF FLANGE TILT ANGLE WILL VARY FROM 0° TO AS REQUIRED.

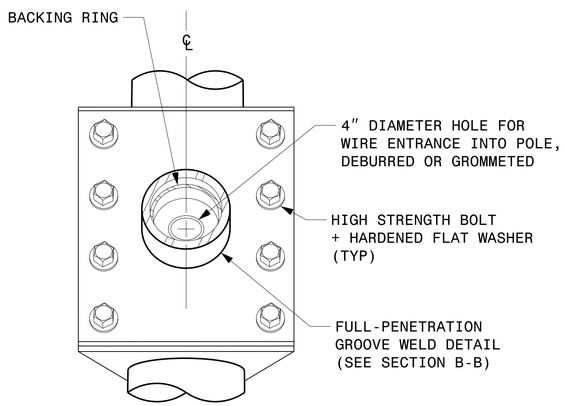

FRONT ELEVATION VIEW

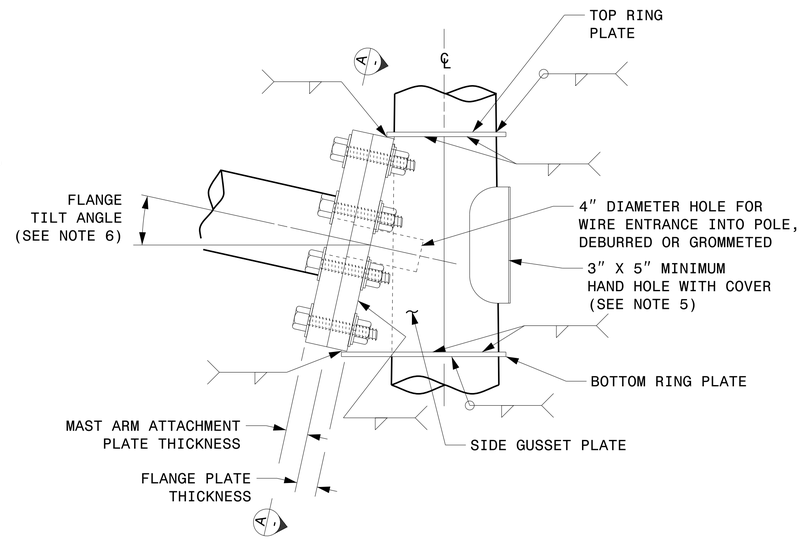

SIDE ELEVATION VIEW

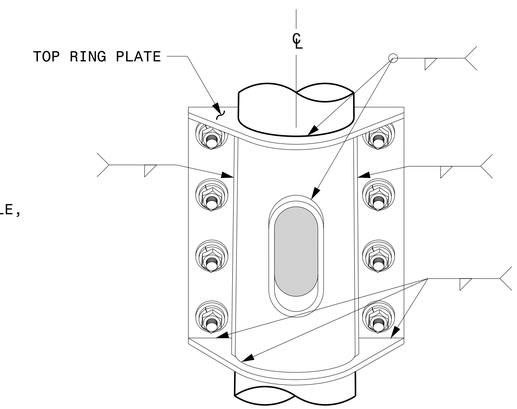

BACK ELEVATION VIEW

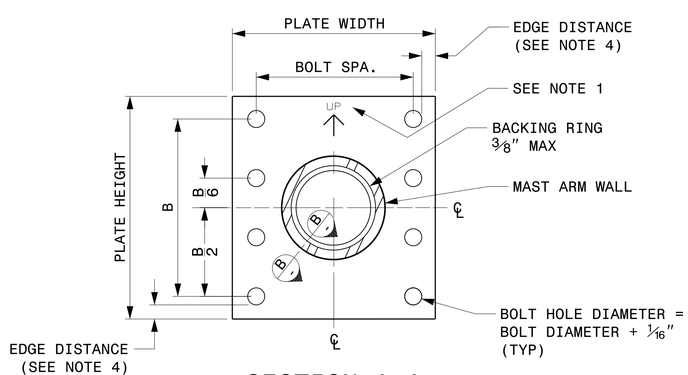

SECTION A-A
MAST ARM ATTACHMENT PLATE

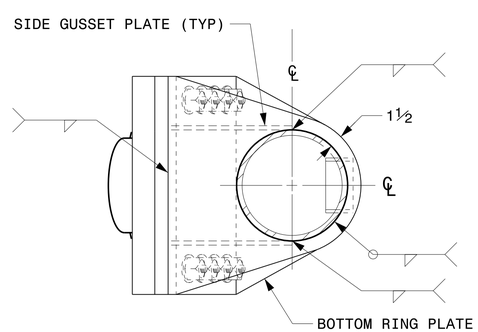

BOTTOM VIEW

Prepared in the Offices of:
Transportation Mobility and Safety Division
STATE OF NORTH CAROLINA DEPARTMENT OF TRANSPORTATION
Signal Design Section
750 N.Greenfield Pkwy,Garner,NC 27529

SCALE 0 NA NONE

Typical Fabrication Details
For
Mast Arm Connection To Pole

PLAN DATE:	SEPTEMBER 2023	DESIGNED BY:	C.F. ANDREWS
PREPARED BY:	K.C. DURIGON	REVIEWED BY:	D.C. SARKAR

REVISIONS	INIT.	DATE

SEAL

NORTH CAROLINA PROFESSIONAL SEAL 036626 ENGINEER KEVIN C. DURIGON

DocuSigned by:
Kevin Durigon
4B23DC79B3784DA...
SIGNATURE
09/21/2023
DATE

Fabrication Details – Mast Arm Connection

03-OCT-2023 12:38
S:\HTS\SOLUTS\ITS\Signals\Signal Design Section\Structures\Drawings\2024 Metal Pole Std Drawings for LRFD\2024 Sig.M5 Std. Connection Fabrication Details-Mast Arm Poles.dgn
kcdurigon