DocuSign Envelope ID: 3ABFDAF7-9184-4E70-9E6E-787C7352EA9E

PROJECT I.D. NO.	SHEET NO.
	Sig.M2

Fabrication Details – All Metal Poles

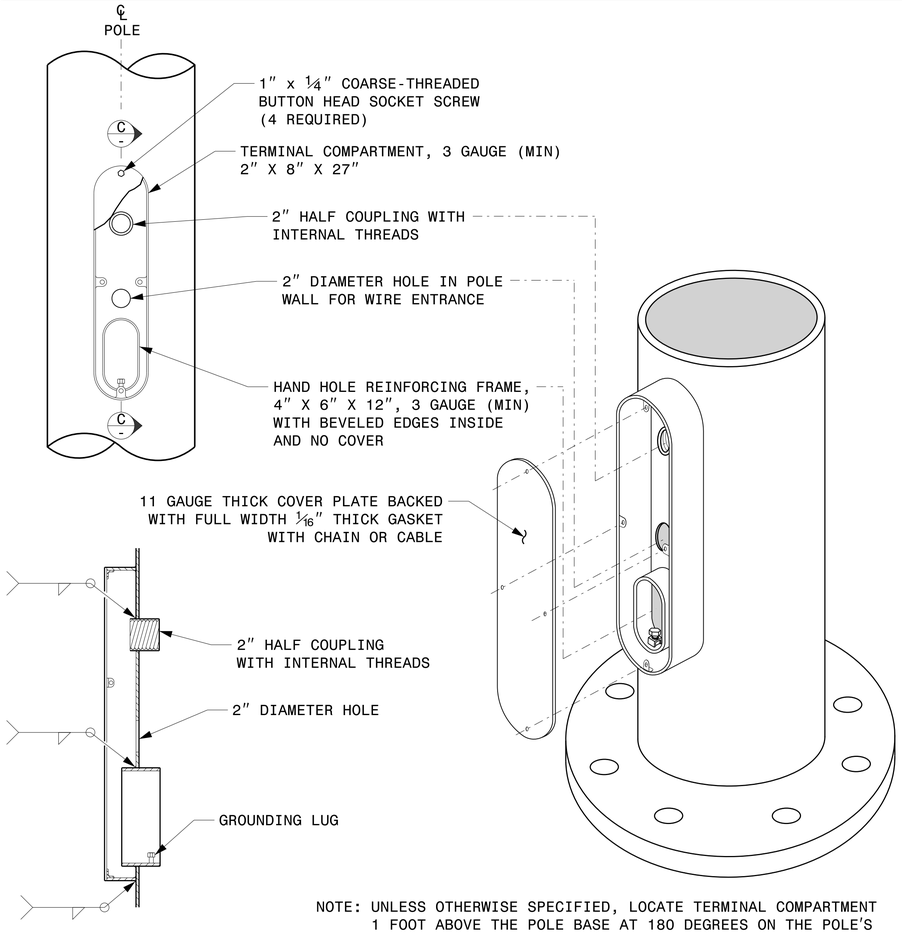

SECTION C-C

NOTE: UNLESS OTHERWISE SPECIFIED, LOCATE TERMINAL COMPARTMENT 1 FOOT ABOVE THE POLE BASE AT 180 DEGREES ON THE POLE'S RADIAL INDEX.

TERMINAL COMPARTMENT DETAIL

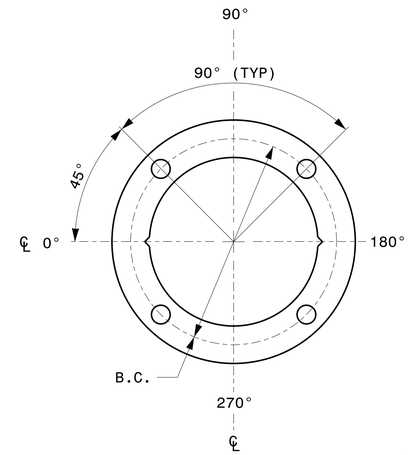

4 BOLT PATTERN

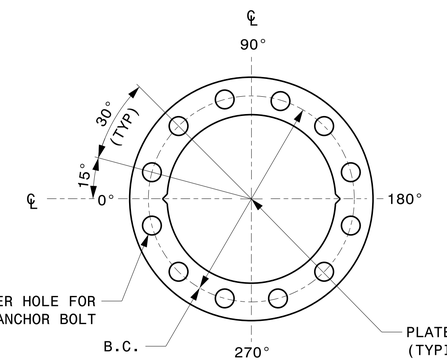

12 BOLT PATTERN

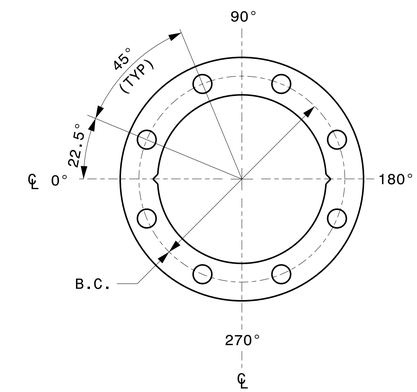

8 BOLT PATTERN

CONSTRUCT TEMPLATES AND PLATES FROM ¼″ (MIN) THICK STEEL. GALVANIZING IS NOT REQUIRED.

BASE PLATE TEMPLATE AND ANCHOR BOLT LOCK PLATE DETAILS

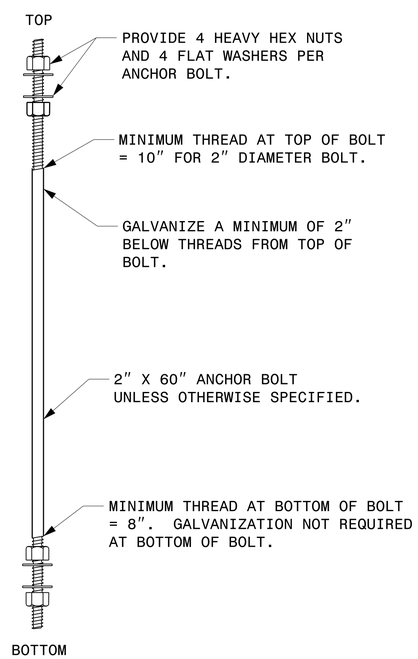

ANCHOR BOLT DETAIL

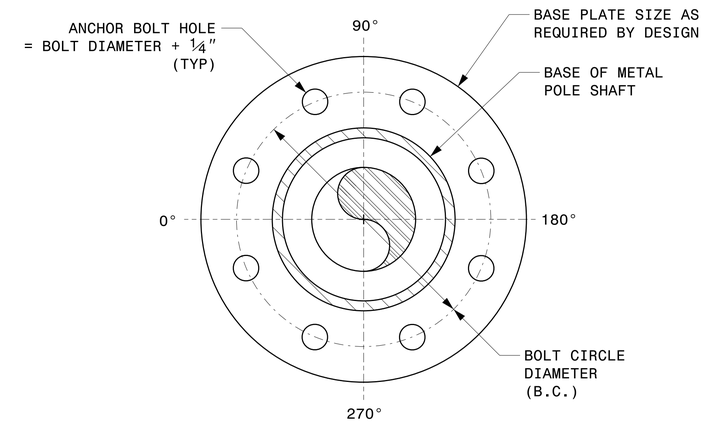

NOTE: BASE PLATE MAY BE CIRCULAR, OCTAGONAL, SQUARE OR RECTANGULAR IN SHAPE.

TYPICAL BASE PLATE DETAIL

MFG _____ MFG. DATE: MM/YY
SHAFT D/T/L/Y ----/----/----/----
ARM-A D/T/L/Y ----/----/----/----
----/----/----/----
ARM-B D/T/L/Y ----/----/----/----
----/----/----/----
A.B. DIA./B.C./L/Y ----/----/----/----
NCDOT SIG. INV. NO. _____
NCDOT POLE NO. _____

SHAFT I.D. TAG
(PROVIDE ON SHAFT OF STRAIN POLES AND MAST ARM POLE SHAFT)

MFG _____ MFG. DATE: MM/YY
SECTION D/T/L/Y ----/----/----/----
NCDOT SIG. INV. NO. _____
NCDOT POLE NO. _____

ARM I.D. TAG
(PROVIDE ON EACH SECTION OF A MULTI-SECTION MAST ARM)

NOTES:

1. D = DIAMETER, T = THICKNESS, L = LENGTH, Y = YIELD STRENGTH
2. A.B. = ANCHOR BOLT
3. B.C. = BOLT CIRCLE OF ANCHOR BOLTS
4. IF STANDARD DESIGN, INCLUDE CASE NUMBER IN ADDITION TO POLE NUMBER ON "NCDOT POLE NO." LINE.
5. SIGNAL INV. NUMBER AND POLE I.D. NUMBER. SEE DRAWING M3 AND M4 FOR MOUNTING POSITIONS OF I.D. TAGS.

IDENTIFICATION TAG DETAILS

Prepared in the Offices of:
Transportation Mobility and Safety Division
STATE OF NORTH CAROLINA DEPARTMENT OF TRANSPORTATION
Signal Design Section
750 N.Greenfield Pkwy,Garner,NC 27529

SCALE
0 NA
NONE

Typical Fabrication Details For All Metal Poles

PLAN DATE: SEPTEMBER 2023	DESIGNED BY: C.F.ANDREWS
PREPARED BY: K.C. DURIGON	REVIEWED BY: D.C. SARKAR

REVISIONS	INIT.	DATE

SEAL
NORTH CAROLINA PROFESSIONAL SEAL 036626 ENGINEER KEVIN C. DURIGON

DocuSigned by:
Kevin Durigon
SIGNATURE
4B23DC79B3784DA...
09/21/2023
DATE

03-OCT-2023 12:24
S:*MTS&SUM*TS Signals*Signal Design Section*Structures*Drawings*2024 Metal Pole Std Drawings for LRFD*2024 Sig-M2 Std. Fabrication Details-All Poles.dgn
kcdurigon