DocuSign Envelope ID: 3ABFDAF7-9184-4E70-9E6E-787C7352EA9E

PROJECT I.D. NO.	SHEET NO.
	Sig.M4

NOTE:

1. OPENING IN POLE BASE PLATE SHALL BE EQUAL TO POLE BASE INSIDE DIAMETER MINUS 3½" BUT SHALL NOT BE LESS THAN 8½".

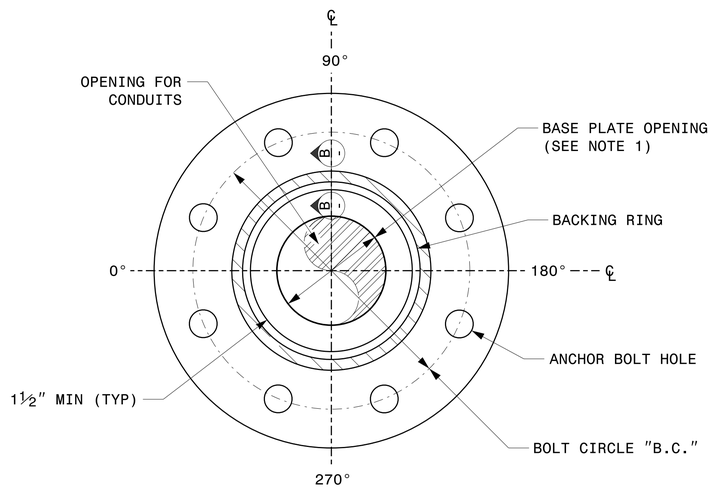

SECTION A-A
POLE BASE PLATE DETAILS

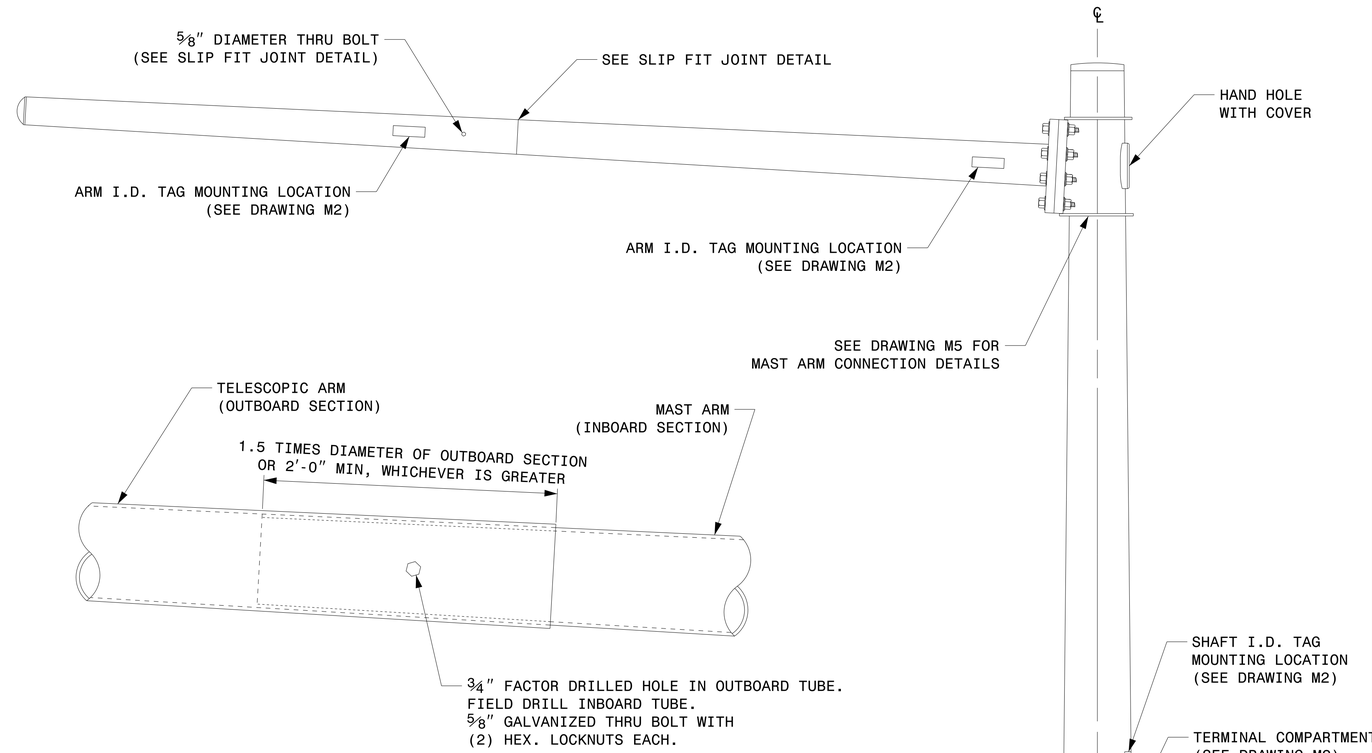

SLIP FIT JOINT DETAIL FOR MAST ARM

MAST ARM POLE

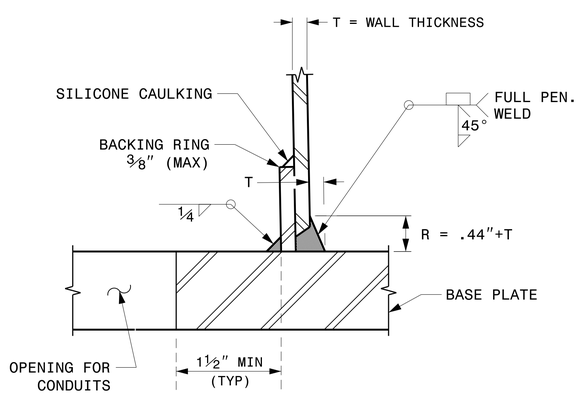

SECTION B-B
(POLE ATTACHMENT TO BASE PLATE)

FULL-PENETRATION GROOVE WELD DETAIL

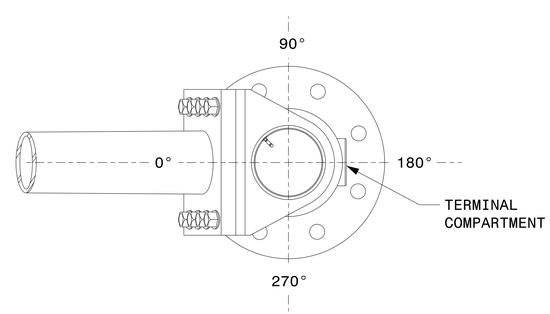

MAST ARM RADIAL ORIENTATION

Fabrication Details – Mast Arm Poles

Prepared in the Offices of:
Transportation Mobility and Safety Division
STATE OF NORTH CAROLINA DEPARTMENT OF TRANSPORTATION
Signal Design Section
750 N.Greenfield Pkwy,Garner,NC 27529

SCALE 0 NA
NONE

Typical Fabrication Details For Mast Arm Poles

PLAN DATE:	SEPTEMBER 2023	DESIGNED BY:	K.C. DURIGON
PREPARED BY:	K.C. DURIGON	REVIEWED BY:	D.C. SARKAR

REVISIONS	INIT.	DATE

SEAL
NORTH CAROLINA PROFESSIONAL SEAL 036626 ENGINEER KEVIN C. DURIGON

DocuSigned by:
Kevin Durigon
SIGNATURE
4B23DC79B3784DA...
09/21/2023
DATE

03-OCT-2023 12:25
S:\4ITS\SIGNALS\Signal Design Section\Structures\Drawings\2024 Metal Pole Std Drawings for LRFD\2024 Sig.M4 Std. Fabrication Details-Mast Arm Poles.dgn
kcdurigon